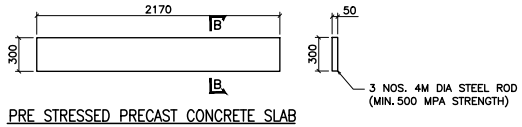

PRE STRESSED PRECAST CONCRETE SLAB

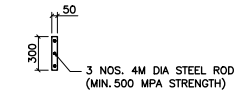

SECTION B–B

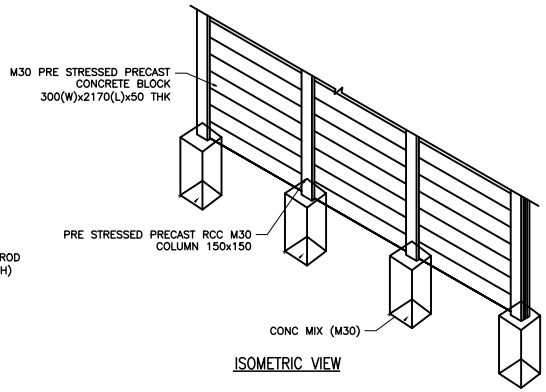

ISOMETRIC VIEW

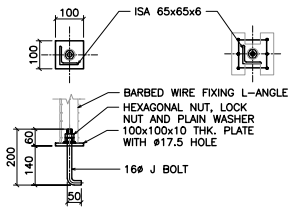

J–BOLT FIXING DETAILS TO CONCRETE COLUMN

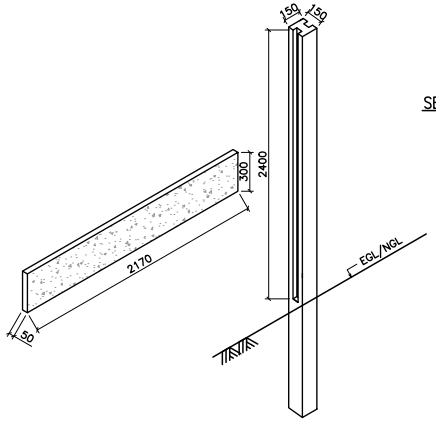

ASSEMBLING DETAILS
PRE STRESSED PRECAST CONCRETE COLUMN

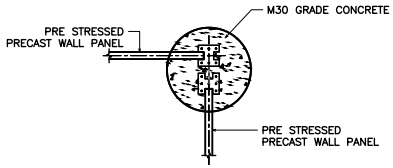

TYPICAL DETAIL OF FOOTING AT EXPANSION
JOINT FOR CORNERS AT 90° TURN

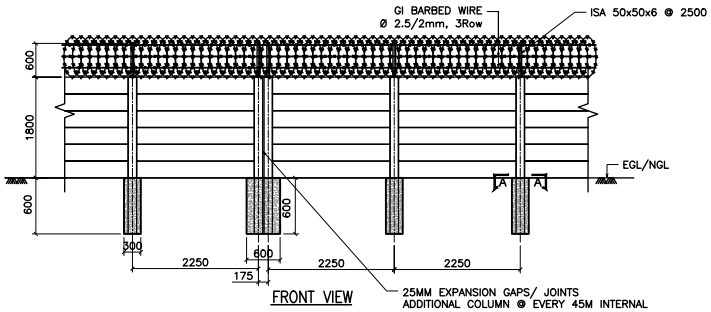

FRONT VIEW

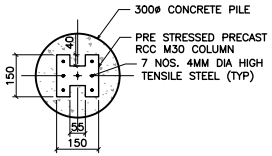

SECTION A–A

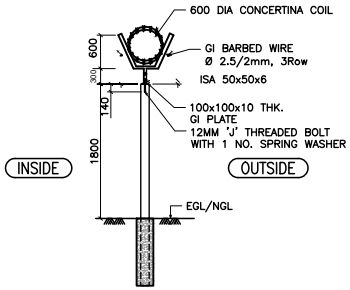

TYPICAL CROSS SECTION OF BOUNDARY WALL

LEGEND :–

TYP – TYPICAL	C/C – CENTER TO CENTER
THK – THICKNESS	PD – PEDESTAL
℄ – CENTER LINE	FDN – FOUNDATION
COL. – COLUMN	GL – GROUND LEVEL
F.G.L. – FINISH GROUND LEVEL	NGL–NATURAL GROUND LEVEL
⅊ – TOR	

NOTES :–

1. THIS DRAWING SHALL BE READ IN CONJUNCTION WITH PLOT PLAN, SPECIFICATIONS AND SCHEDULE OF ITEMS, CONTRACT TERMS AND CONDITIONS.
2. ALL DIMENSION ARE IN mm. & ALL LEVEL ARE IN MTRS.
3. EXPANSION JOINTS TO BE PROVIDED AT EVERY 45 MTS OF BOUNDARY WALL.
4. GRADE OF CONCRETE SHALL BE OF GRADE M30.
5. ALL WELDS 4 MM THK. FILLET CONTINUOUS (U.N.O.)
6. ALL WELDS SHALL BE IN ACCORDANCE WITH IS 816.
7. ALL STRUCTURAL STEEL SECTION SHALL BE IN ACCORDANCE WITH IS:2062 – GRADE A AND HAVING MINIMUM YELD STRENGTH OF 250 N/MM.
8. ALL STEEL WORK TO RECEIVE ONE COAT OF RED OXIDE PRIMER AND TWO COAT OF SYNTHETIC ENAMEL PAINT OF APPROVED MAKE CONFIRMING TO IS SPECIFICATIONS.
9. GROOVE BETWEEN COLUMN AND PANEL TO BE FILLED WITH CEMENT MORTAR (1:4)
10. DEPTH OF FOUNDATION SHALL BE MINIMUM 1000MM FROM NGL AND HEIGHT OF BOUNDARY WALL SHALL BE TAKEN FROM FGL.
11. PLATES SHALL BE OF MILD STEEL CONFIRMING TO GRADE–A OF IS:2062:1992
14. DIAGONAL BRACING SHALL BE PROVIDED AT START AND END OF SPAN BETWEEN EVERY EXPANSION JOINT AND AT EVERY DIVERSION/ BENT OF BOUNDARY WALL.
15. BIDDER TO PROVIDE TEST CERTIFICATE FOR PRE STRESSED PRECAST ELEMENTS. ALSO NEED TO CARRYOUT NECESSARY FIELD TEST AT SITE.

PROJECT:– –

TPCODL

DESIGNED	SC	DWG TITLE: TYPICAL DETAILS OF PRE STRESSED PRECAST BOUNDARY WALL
DRAWN	MDG	
CHECKED	PS	
APPROVED	CS	SCALE: NTS · DATE · DWG NO. · SH– 0 · REV. A

DEPT	CLEARED SIGNATURE	DATE
CHEM		
CIVIL		
ELEC		
I&C		
MECH		

ISSUE	REVISIONS	DRN	CLEARED CHEM	CIVIL	ELEC	I&C	MECH	APPD	DATE

ISSUE	REVISIONS	VENDOR'S DWG NO.: DRN	CLEARED CHEM	CIVIL	ELEC	I&C	MECH	APPD	DATE

FILE NAME :

"IF PRELIMINARY ISSUES ARE NOT TO BE CLEARED BEFORE CONSTRUCTION/ FABRICATION BUT ARE RESOLVED FOR CONSTRUCTION ONLY, AS INDICATED IN THE SMALL IN BOX AT THE TOP RIGHT HAND CORNER OF THIS DRAWING.
CONSTRUCTION/ FABRICATION WORK IS PERMITTED ON 'IF' (RELEASED) ISSUES ONLY.
INFORMATION CONTAINED WITHIN 'HOLD' IS NOT RELEASED FOR CONSTRUCTION/ FABRICATION. FIELD WELD SITE INSPECTION, FIELD CLEANING, FIELD TESTING, REPAIR PROCEDURES, ETC. ARE NOT CONSTRUCTION/FABRICATION WORK RELATED ISSUES."

FORM NO. ENG–FM–32–R1

\\Vasun\corporate engineering\01Proj Engg\02Engg ISO\DOCUMENTS\FORMS\Vendor Dwgs– A0

SIZE–A1