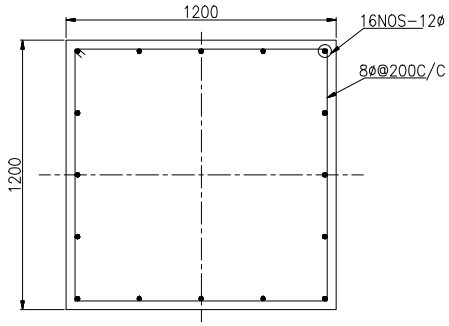

SECTION - BB

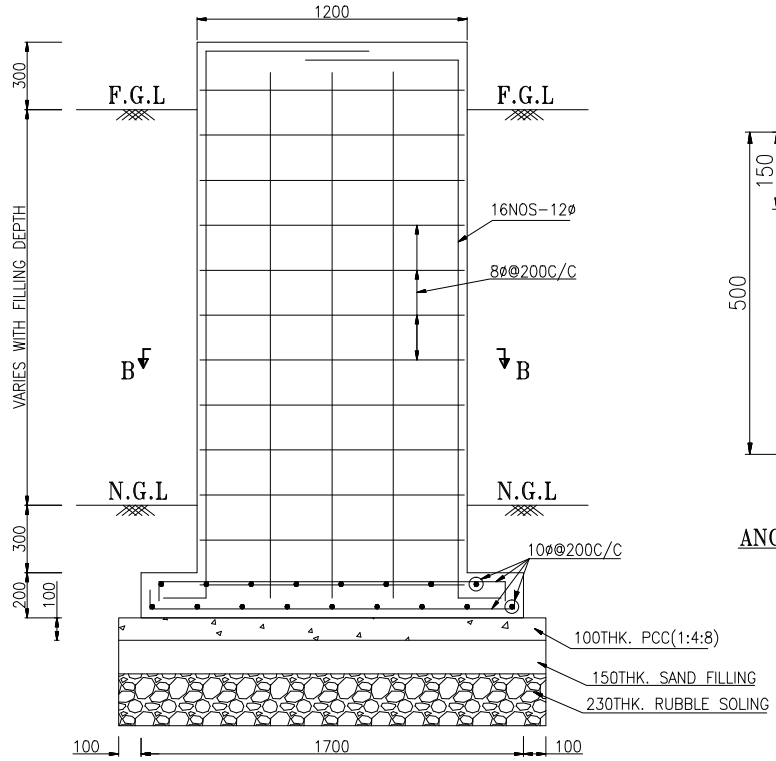

SECTION - AA

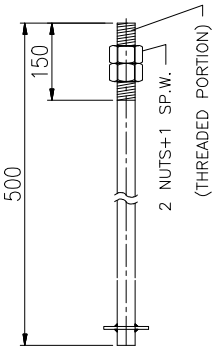

DETAIL OF
ANCHOR BOLT (20ø)

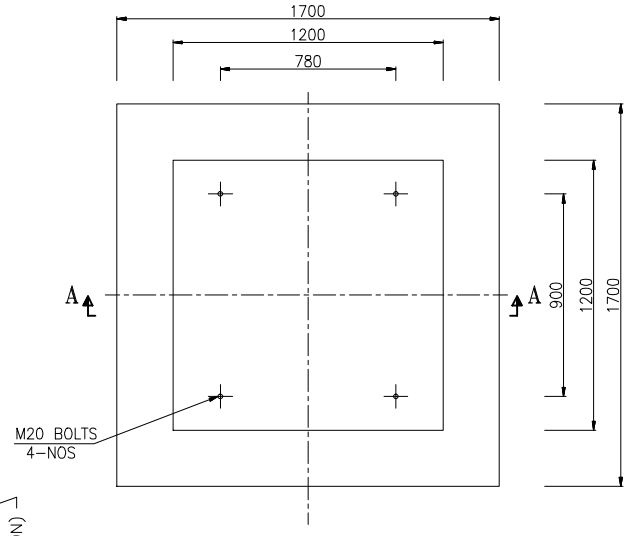

NOTES:-

1. ALL DIMENSIONS ARE IN MM.
2. GRADE OF CONCRETE SHALL BE M20
3. GRADE OF STEEL SHALL BE Fe-415 CONFORMING TO IS 1786
4. CLEAR COVER TO THE MAIN REINFORCEMENT SHALL BE 50MM.
5. PROVIDE LAP/DEVELOPMENT LENGTH EQUAL TO 50xd, WHERE d IS DIA OF REINFORCEMENT
6. SBC OF FOUNDING STRATA SHALL NOT BE LESS THAN 6.65 TON/M^2

FOR TENDER PURPOSE ONLY

Rural Electrification Corporation Ltd.

PROJECT:
Revamped Distribution Sector Scheme (RDSS)

TITLE
DETAILS OF 33kV VCB FOUNDATION

REV. NO.	PREPARED	CHECKED	APPROVED	DATE	PROJECT
R0					

SIZE	SCALE	DRG. NO.	SHT. NO.	REV. NO.
A4	1:100	REC/RDSS/33kV/02	1 OF 1	0

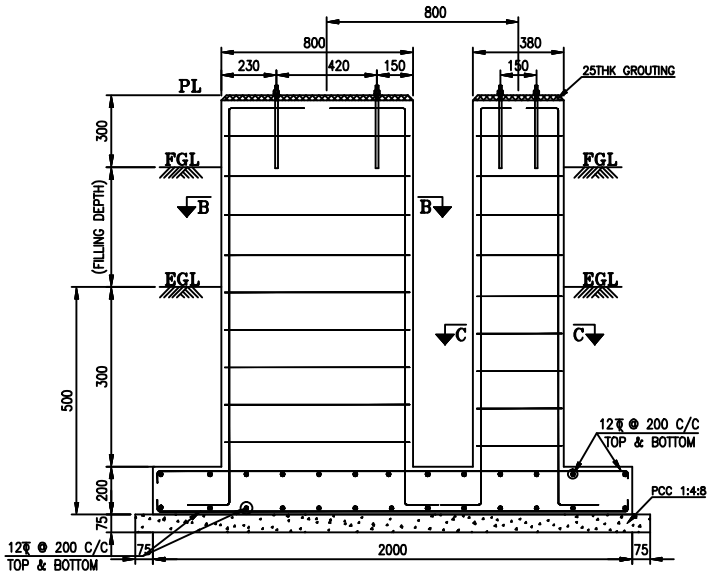

SECTION A-A

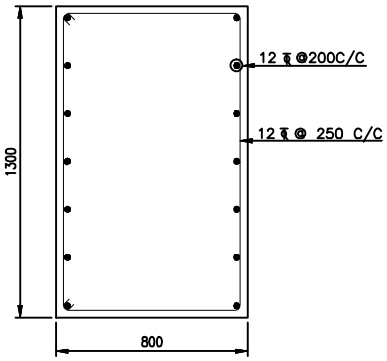

SECTION B-B

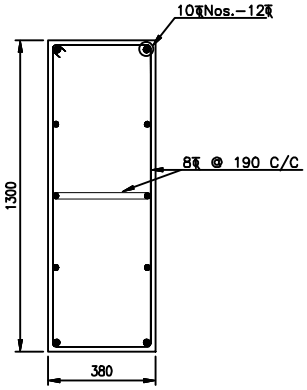

SECTION C-C

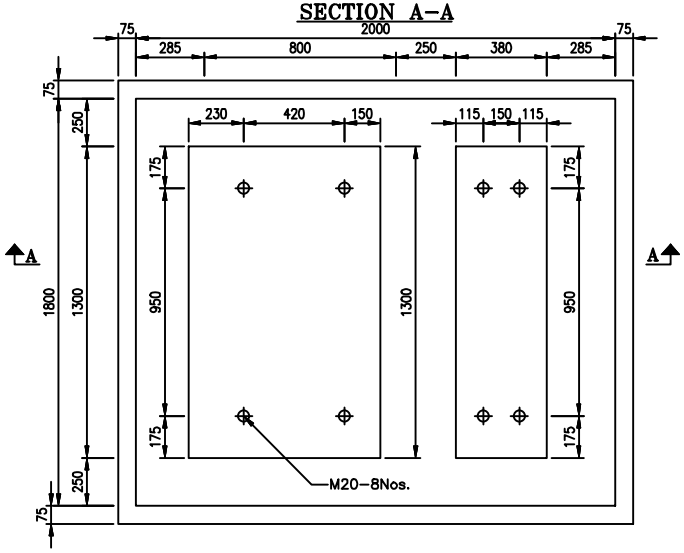

FOUNDATION PLAN

NOTE:-

1. ALL DIMENSIONS ARE IN MILLIMETRES UNLESS OTHERWISE SPECIFIED
2. ALL CONCRETE GRADE M20 UNLESS OTHERWISE SPECIFIED
3. REINFORCEMENT STEEL SHALL BE HYSD BAR UNLESS OTHERWISE SPECIFIED
4. CLEAR COVERS TO REBARS SHALL BE AS FOLLOWS
   FOUNDATION RAFTS – 50
   PEDESTALS – 50
5. LAP LENGTH TO REBAR SHALL BE MIN. 50 DIA AND LAPS IN ALTERNATIVE BARS SHALL BE STAGGERED.
6. FOR DETAILS OF FOUNDATION BOLT
   REFER DRG NO: (4)G71570-X8205-F003, SIEMENS LTD. MAKE.

FOR TENDER PURPOSE ONLY

Rural Electrification Corporation Ltd.

PROJECT:
Revamped Distribution Sector Scheme (RDSS)

TITLE FOUNDATION DETAILS OF 33KV VCB&CT

REV. NO.	PREPARED	CHECKED	APPROVED	DATE	PROJECT
R0					

SIZE	SCALE	DRG. NO.	SHT. NO.	REV. NO.
A3	NTS	REC/ RDSS /33/11kV PSS/09	1 OF 1	0

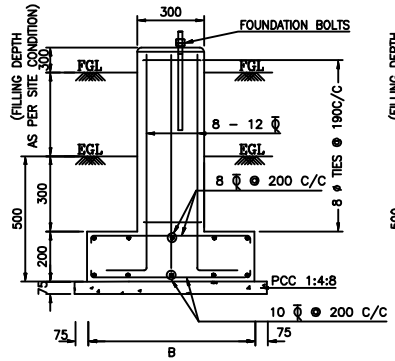

SECTION A–A

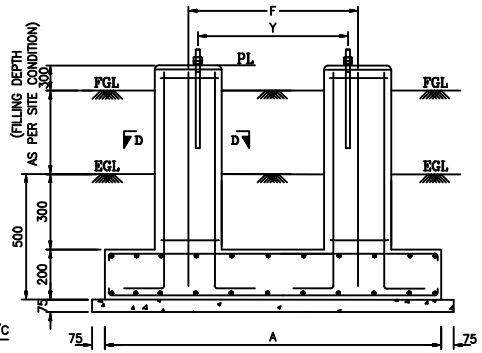

SECTION B–B

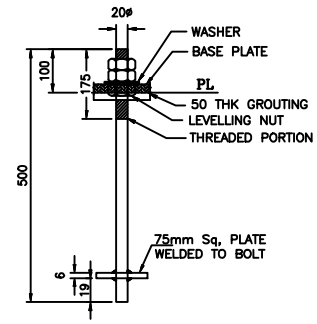

FOUNDATION BOLT DETAIL

EQUIPMENT TYPE	FOUNDATION DIMENSIONS				
	A	B	F	X	Y
33KV ISO	1500	600	474.6	1393.6	403.6
33KV HGF	1300	800	564.6	1393.6	493.6
11KV ISO	1400	600	386.6	793.6	315.6

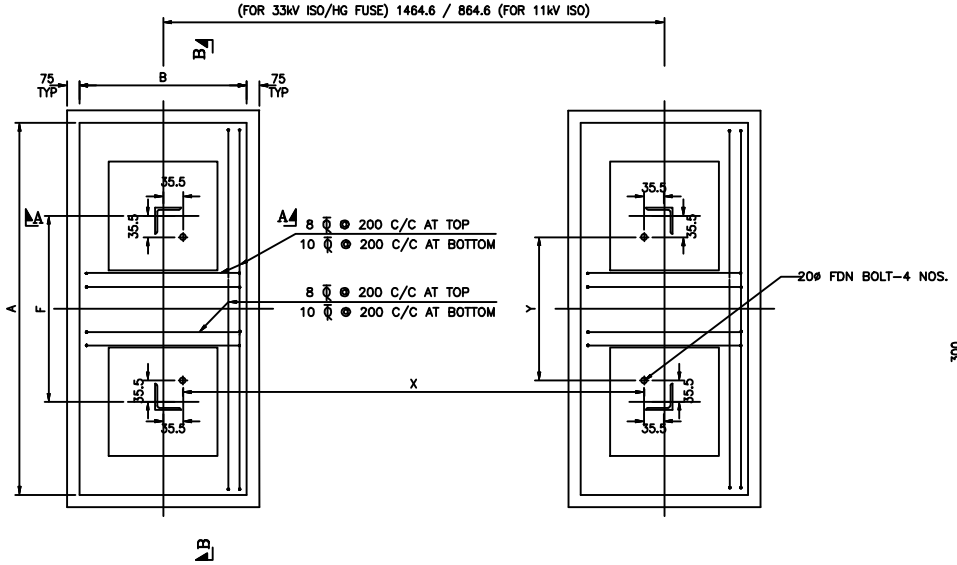

FOUNDATION PLAN

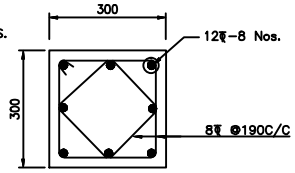

SECTION D–D

NOTES:–

1. ALL DIMENSIONS ARE IN MM, & ELEVATIONS ARE IN METRE UNLESS OTHERWISE MENTIONED.
2. ALL STRUCTURAL CONC. SHALL BE 1:1.5:3 (1 CEMENT : 1.5 COARSE SAND: 3 GRADED STONE AGGREGATE OF 20MM NOMINAL SIZE)
3. ALL LEAN CONC SHALL BE 75MM.THK AND OF GRADE 1:4:8 (1 CEMENT: 4 COARSE SAND : 8 GRADED STONE AGGREGATE OF 40 MM NOMINAL SIZE)
4. ALL REINFORCEMENT STEEL BARS (DENOTED AS 0) SHALL CONFORM TO IS: 1786–1985 OF GRADE Fe 415 OR TMT BARS OF EQUAL GRADE.
5. UNLESS NOTED OTERWISE LAP/ANCHOR LENGTH SHALL BE 50 TIMES THE DIA.OF BARS.
6. CLEAR COVER TO MAIN REINF.SHALL BE 50MM.
7. FOR LOCATIONS OF EQPT FDNS REFER LAYOUTS OF RESPECTIVE SUBSTATIONS.
8. ALL FOUNDATIONS SHALL REST MIN.500 MM BELOW VIRGIN SOIL.
9. NET SBC OF SOIL = 8 T/SQM.
10. FGL DENOTES FINISHED GROUND LEVEL

FOR TENDER PURPOSE ONLY

Rural Electrification Corporation Ltd.

PROJECT:
Revamped Distribution Sector Scheme (RDSS)

TITLE FOUNDATION DETAILS OF 33KV ISO,HG FUSE AND 11KV ISO

REV. NO.	PREPARED	CHECKED	APPROVED	DATE	PROJECT
R0					

SIZE	SCALE	DRG. NO.	SHT. NO.	REV. NO.
A3	NTS	REC/ RDSS /33/11kV PSS/10	1 OF 1	0